SECURITY CLASSIFICATION

CLASSIFICATION CODE

3rd ANGLE PROJECTION

USED ON

BASED ON

CERT'D

CHK'D GP 17/01/06

DRAWN GP 06/01/06

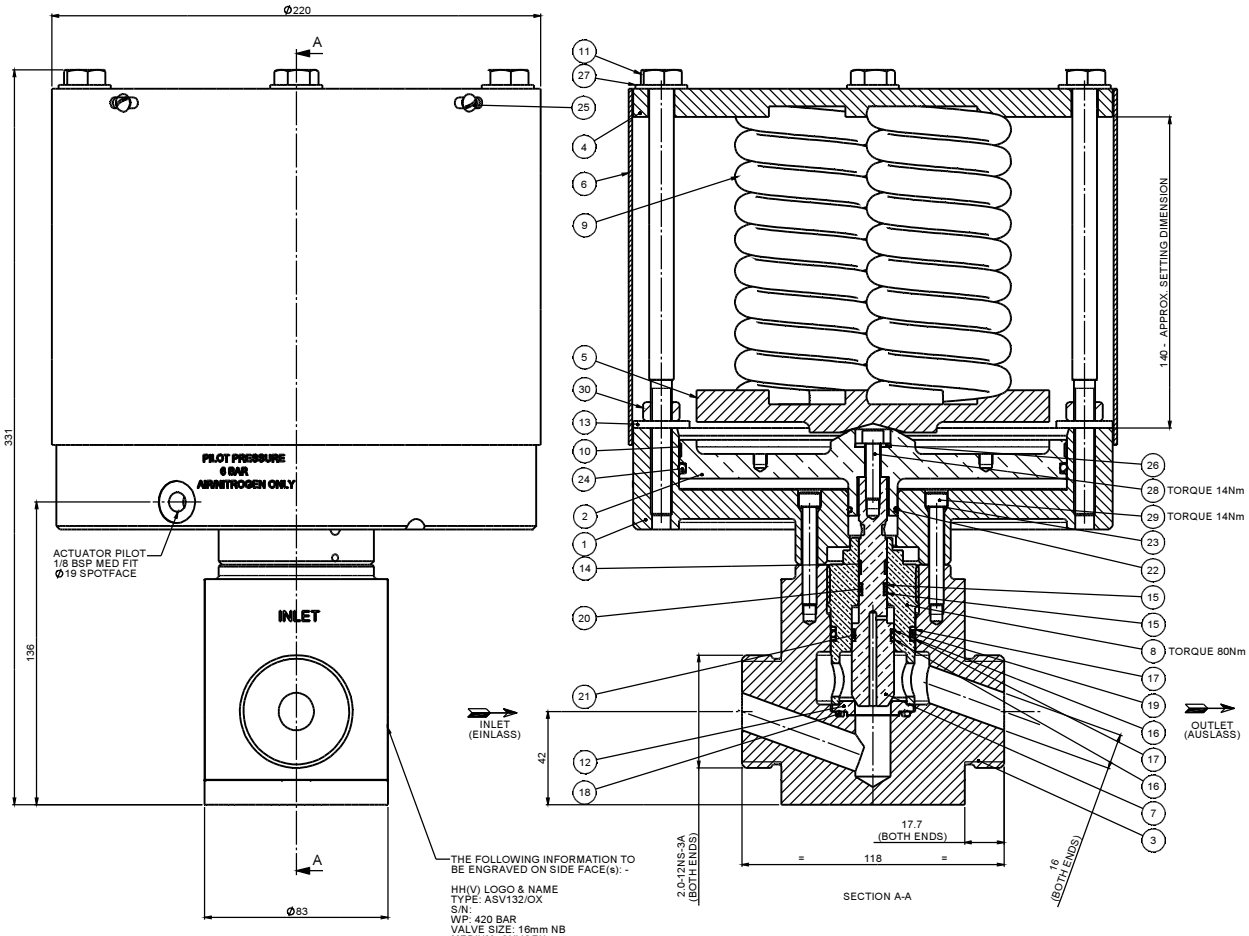

THE FOLLOWING INFORMATION TO BE ENGRAVED ON SIDE FACE(s): -

HH(V) LOGO & NAME
TYPE: ASV132/OX
S/N:
WP: 420 BAR
VALVE SIZE: 16mm NB
MEDIUM: OXYGEN
FLOW DIRECTION ARROW
MATERIAL: BRASS BS2874 CZ121
BATCH No:

TECHNICAL DATA:

MEDIUM: -	GASEOUS OXYGEN
MAX. WORKING PRESSURE: -	420 BAR (6090 PSI)
HYDROSTATIC TEST PRESSURE: -	630 BAR (9135 PSI)
ACTUATOR OPERATING PRESSURE: -	6 BAR (87 PSI)
ACTUATOR HYDROSTATIC TEST PRESSURE: -	20 BAR (290 PSI)
TEMPERATURE OPERATING RANGE: -	-20°C to 70°C
VALVE/SEAT SIZE: -	Ø16mm
CLEANING SPECIFICATION: -	HH(V) SPEC. C7
LUBRICATION: -	USE GLEITMO 595 LUBRICANT ONLY (SPARINGLY ON WETTED PARTS)
TEST SPECIFICATION: -	HH(V) SPEC. 1145

OPERATING INSTRUCTIONS TSD No. 0132 MUST ACCOMPANY EACH VALVE DESPATCHED.

TEST ITEMS: -
TC205 - RETAINING NUT
TC206 - TEST FERRULE
TD3014 - TEST ADAPTOR
BO3216 - O RING BS1806-216

ITEM NO.	PART NUMBER	DESCRIPTION	MATERIAL	QTY.
1	NB47443	ACTUATOR BODY	M/STEEL BS970 230M07 Zn.Plt.	1
2	NB47770	PISTON	BRASS BS2874 CZ121	1
3	NB47917	VALVE BODY	BRASS BS2874 CZ121	1
4	NC47771	TOP PLATE	NC47911 (FLAME CUT BLANK)	1
5	NC47772	SPRING CARRIER	Ni.Al.BRONZE NES833 Pt.2	1
6	NC47773	ACTUATOR COVER	M/STEEL BS1449 Zn.Plt.	1
7	NC47947	VALVE SPINDLE	BRASS BS2874 CZ121	1
8	NC47948	CARTRIDGE INSERT	BRASS BS2874 CZ121	1
9	ND46602	SPRING	ST/STEEL BS2056 HS GR.3	2
10	ND47776	SLYDRING	BO8035	1
11	ND47778	BOLT - SPECIAL	M/STEEL BS970 230M07 Zn.Plt.	4
12	NE47921	VALVE SEAT	MONEL 500 BS3076 NA18	1
13	NE46666	WASHER	M/STEEL BS970 230M07 Zn.Plt.	4
14	NE47777	SLYDRING	BO8035	1
15	NC13501-012	BACK UP RING (PISTON)	PTFE	2
16	NC13501-016	BACK UP RING (PISTON)	PTFE	2
17	NC13501-125	BACK UP RING (PISTON)	PTFE	2
18	BO5618	O RING BS1806-122	VITON E60C	1
19	BO5621	O RING BS1806-125	VITON E60C	1
20	BO5589	O-RING BS1806-012	VITON E60C	1
21	BO5593	O RING BS1806-016	VITON E60C	1
22	BO5595	O RING BS1806-018	VITON E60C	1
23	BO5587	O-RING BS1806-010	VITON E60C	6
24	BO6670	O RING BS1806-260	MED NITRILE	1
25	BO1880	2 BA x 3/8 LG. RD'HD SCREW	ST.STEEL A35/C12	4
26	BO3817	1/4" PLAIN WASHER		1
27	BO3849	7/16" PLAIN WASHER - ST.ST.	ST. STEEL	4
28	BO1128	1/4-28 UNF x 1" CAPSCREW	HTS	1
29	BO3626	SOC CAP HD SCREW 1/4-28UNFx1.75"-.HTS.		6
30	BO1542	3/8"UNF NUT - ZNC PLTD STEEL		4

ISSUE	CHANGE	MOD BY	ISSUED BY	ISSUE DATE
08	AN16779	JJ	JJ	01/08/11
07	AN15721	GP	GP	17/01/06

REVISIONS

MATERIAL:

SPECIFICATION:

FINISH:

SPECIFICATION:

CONTRACTOR: VALE HAMILTON (VALVES) LTD UXBRIDGE

CONTRACTORS DRG N°: NA47934 — Sheet 1 of 1

MOD ESTABLISHMENT

TITLE: 16mm ACTUATED STOP VALVE HARD SEAT FOR TYPE: - ASV132/OX

NSN

RESPONSIBLE AUTHORITY

SECURITY CLASSIFICATION & CAVEAT

CHANGE N°. DATE ISSUE 08

N°. OF SHEETS 1

TOLERANCE: X.X = ±0.2 mm; X.XX = ± 0.1mm

ESTIMATED MASS: 24.36 kg

S C R/A DRG N° ORIGIN: K 0 2 0 7

SERVICE DRAWING N°.

TYPE SHEET N°.

PROJECT N°.: 8008

PARTS LIST N°.

REMOVE SHARP CORNERS 0.4mm MAX.RAD.:OR CHAMFER UNLESS OTHERWISE STATED.

DIMS.IN: mm

SCALE: 1:1

E N 1 1 1

This document may be out-of-date because it has file references that may have been updated. (more...)